REVISIONS				
ZONE	REV	DESCRIPTION	DATE	APPROVED
	A	ECN 0553	20-MAY-05	
	B	ECN 0602	10-AUG-06	

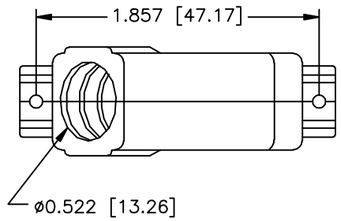

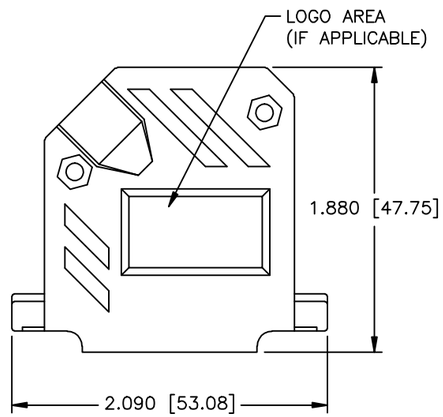

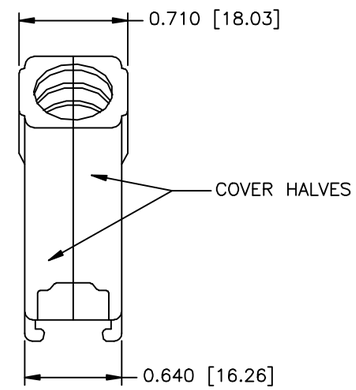

#4-40 X 7/16" FILLISTER HEAD MACHINE SCREW
MATERIAL – STEEL
FINISH – BRIGHT ZINC (HEXAVALENT CHROMIUM FREE)
QTY: 2 EACH

#4-40 #2 BLANK HEX NUT
MATERIAL – STEEL
FINISH – BRIGHT ZINC (HEXAVALENT CHROMIUM FREE)
QTY: 2 EACH

#4-40 X 1/2" FILLISTER HEAD CAPTIVE SCREW
MATERIAL – STEEL
FINISH – BRIGHT ZINC (HEXAVALENT CHROMIUM FREE)
QTY: 2 EACH

#4 SADDLE WASHER
MATERIAL – STEEL
FINISH – BRIGHT ZINC (HEXAVALENT CHROMIUM FREE)
QTY: 2 EACH

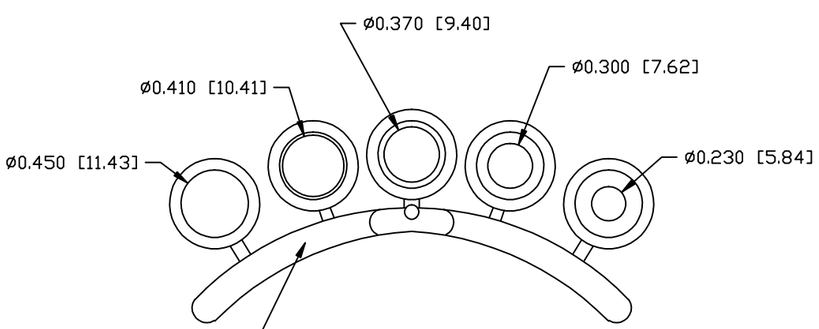

COMPRESSION INSERT TREE
QTY. 1

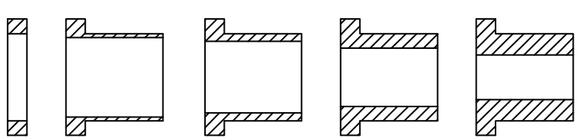

NO LOGO

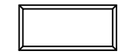

NORTECH LOGO

PART NUMBER INFORMATION

PART#	LOGO STYLE	SUPPLIED
A30E220000	NO LOGO	BULK
C88E220000	NO LOGO	PACKAGED
A30E221000	NORTECH LOGO	BULK
C88E221000	NORTECH LOGO	PACKAGED

CONNECTOR COVER:

1. MATERIAL: ABS COMPOUND – UL94HB
2. FINISH: NICKEL PLATING PER NTC SPECIFICATION N/T 000500
3. DIMENSIONS: INCHES [MM]
4. TOLERANCE: ±0.015 [0.381]

COMPRESSION INSERT TREE

1. MATERIAL: THERMOPLASTIC
2. COLOR: BLACK
3. DUROMETER: 75 ±5 TYPE A PER ASTM D2240
4. DIMENSIONS: INCHES [MM]
5. TOLERANCE: ±0.020 [0.508]

THIS IS A CONTROLLED DOCUMENT AND IS SUBJECT TO CHANGE. CONTACT NORTHERN TECHNOLOGIES ENGINEERING FOR THE LATEST REVISION.

UNLESS OTHERWISE SPECIFIED
1. ALL DIMENSIONS ARE IN INCHES (MM)
2. DIMENSIONS ARE TYPICAL

DRAWN JSD	10-FEB-05
CHECKED SCN	10-FEB-05
ISSUED	10-FEB-05

Northern Technologies

THIS DRAWING IS THE PROPERTY OF NORTHERN TECHNOLOGIES AND SHOULD NOT BE REPRODUCED WITHOUT NORTHERN TECHNOLOGIES WRITTEN PERMISSION.

PART NUMBER SEE PART NUMBER INFORMATION
DESCRIPTION CMP 25 45 DEGREE EXIT
TWO PIECE METALIZED PLASTIC COVER

SIZE	CODE	DWG NO.	REV
B	200_138	0002-200-138	

SCALE 1:1 | SHEET 1 OF 1